OSCILATORI

Sinusni signal

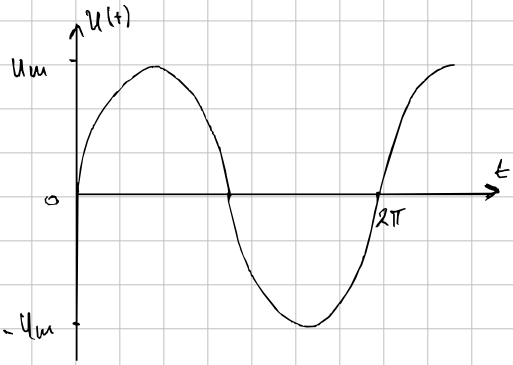

Vremenski odziv

$u(t) = U_m \cdot \sin(\omega t)$

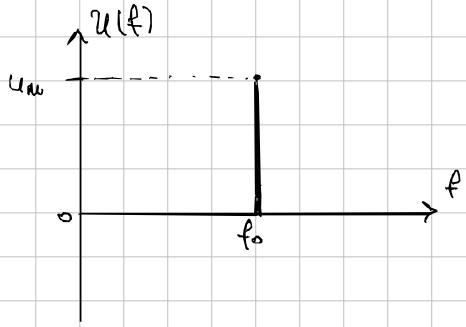

spektar

$f_0 = \frac{\omega_0}{2\pi}$

Oscilator isto sklop pojačala: zadovoljen drugačiji uvjet

umjesto $|\beta(j\omega_{180}) \cdot A(j\omega_{180})| < 1$ stabilno $\Longrightarrow$ $|\beta(j\omega_{180}) \cdot A(j\omega_{180})| > 1$ nestabilno

pozitivna P.V. !

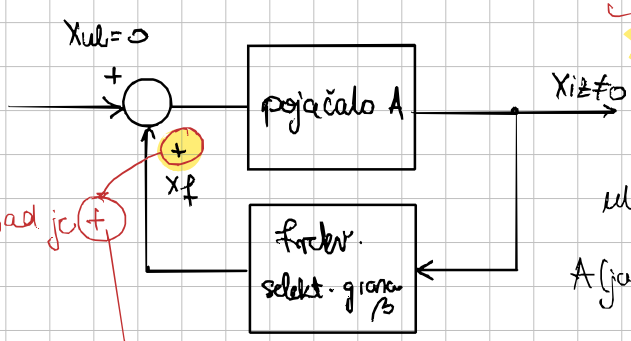

povratni signal x_f vraća se na ulaz pojačala s poz. predznakom

$A(j\omega) = \frac{X_{iz}}{X_a}$ $\quad \beta(j\omega) = \frac{X_f}{X_{iz}}$, $X_a = X_{ul} + X_f$

$$A_f(j\omega) = \frac{X_{iz}}{X_{ul}} = \frac{A(j\omega)}{1 - \beta(j\omega) A(j\omega)}$$

$$\boxed{A_f(j\omega) = \frac{A(j\omega)}{1 - T(j\omega)}}$$

sad je minus

Barkhausenov kriterij oscilacija

na frekv. oscilacija ω_0 : $1 - T(j\omega) = \emptyset \Rightarrow A_f(j\omega) = \frac{X_{iz}}{X_{ul}} = \frac{A(j\omega)}{\emptyset} = \infty$

Barthaus. krit. oscilacija $T(j\omega_0) = \beta(j\omega_0) \cdot A(j\omega_0) = 1$

1. $\angle T(j\omega_0) = 0°$
   - prolaskom kroz pojačalo i granu P.V. signal se na ulazu mora vratiti $\boxed{\text{s istom fazom}}$

2. $|T(j\omega_0)| = 1$
   - prolaskom —||— mora vratiti $\boxed{\text{s istom amplitudom}}$

→ pojačanje takvog jednog sklopa je ∞ ⇒ sustav sam sebe održava
⇒ mora postojati neki ul. signal koji će se raspršiti

Oscilatori – sklopovi koji generiraju napone periodičkih valnih oblika

→ **sinusni ili harmonijski**
koriste poz P.V.

→ **relaksacijski oscilatori**
→ ostali valni oblici ⇒ (ASTABILI, KOMPARATORI)
*(2. gelina)

RC-oscilatori selektivna P.V. se sastoji od OTPORNIKA i KONDENZATORA

→ koriste za generiranje napona frekv. područja od 10 ~ tać Hz — n.MHz

Primjeri:
- ▷ oscilator s Wienovim mostom
- ▷ oscilator s faznim pomakom

Oscilator s Wienovim mostom

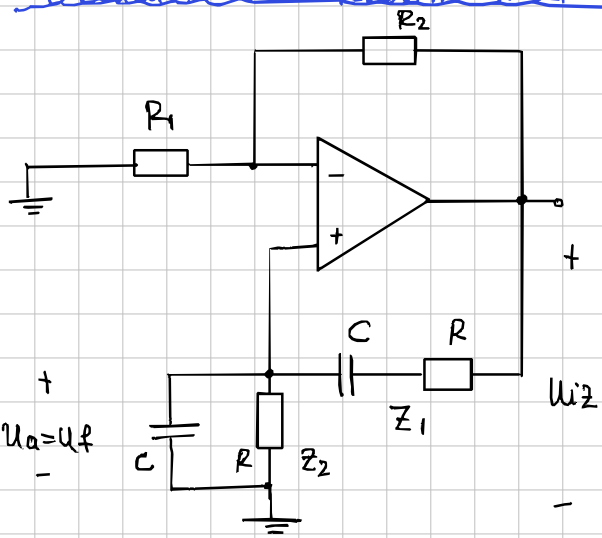

A-grana : op + R_1 i R_2

β-grana : dva spoja R i C
↳ Z_1 i Z_2

• neg. P.V. → R_2 i R_1
↳ odredjuje pojačanje pojačala

• poz. P.V. → Z_1 i Z_2
↳ uzrokuje oscilacje

↳ ovako je malo teško za analizirati

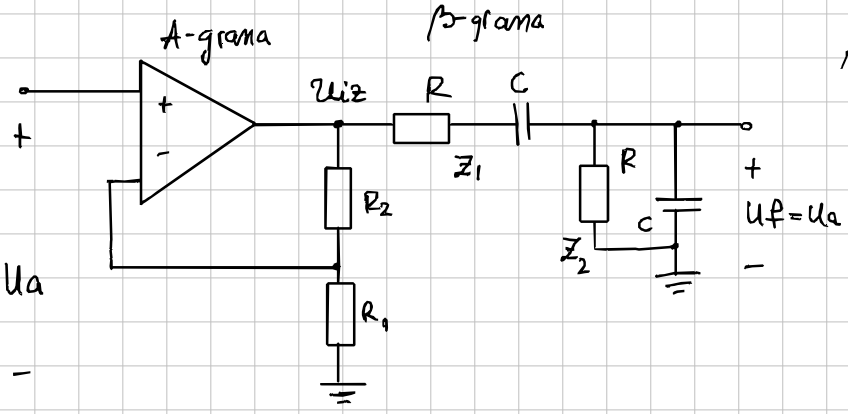

$$A_V = \frac{U_{iz}}{U_a} = 1 + \frac{R_2}{R_1}$$

$$Z_1 = R + \frac{1}{j\omega C}$$

$$Z_2 = \frac{R}{1 + j\omega RC}$$

$$\beta(j\omega) = \frac{U_f}{U_{iz}} = \frac{Z_2}{Z_1 + Z_2} = \dots = \frac{1}{3 + j\left(\omega RC - \frac{1}{\omega RC}\right)}$$

Imaginarni dio

(1)

Na frekv. oscilirania ω_0 → $\angle T(j\omega_0) = \angle \beta(j\omega_0) \cdot A_V = 0°$

$\beta(j\omega_0) > 0, \in \mathbb{R}$ $\left(\mathrm{Im}(\beta(j\omega_0)) = \emptyset\right)$

Zato izjednačavamo s nulom

$$\omega_0 RC - \frac{1}{\omega_0 RC} = 0$$

$$(\omega_0 RC)^2 = 1 \Rightarrow \omega_0 = \frac{1}{RC} \dots\dots \Rightarrow f_0 = \frac{1}{2\pi \cdot RC}$$

$$\beta(j\omega) = \frac{1}{3 + j\underbrace{\left(\frac{1}{RC} \cdot RC - \frac{1}{RC} \cdot RC\right)}_{\emptyset}} \Rightarrow \boxed{\beta(j\omega) = \frac{1}{3}} \checkmark \; > 0, \in \mathbb{R}$$

(2°) za $|T(j\omega_0)| = 1$ ⟶ $A_V \cdot \underset{\frac{1}{3}}{\beta(j\omega)} = 1 \Rightarrow A_V = 3 \rightarrow A_V = \frac{1}{\beta(j\omega_0)} = 3$

$R_2 = 2R_1$

Oscilator s Wienovim mostom – stabilizacija amplitude

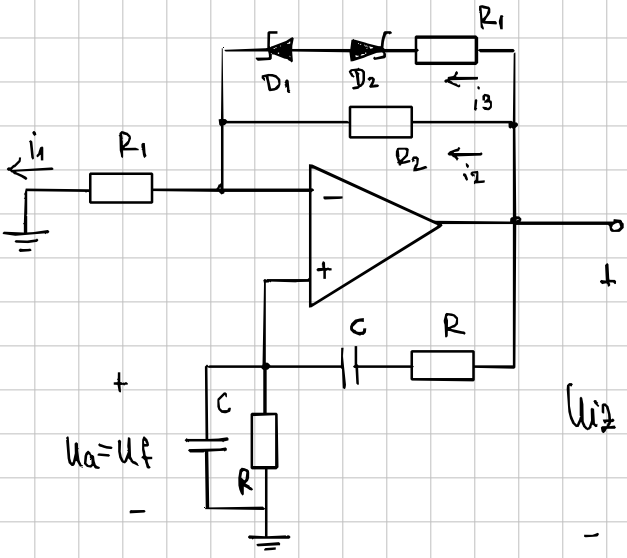

* Želimo signal fikcne amplitude

→ amplituda može ići samo do amplitude napona napajanja

↳ što se više približava to se smanjuje pojačanje

⇒ izobličeni sinus

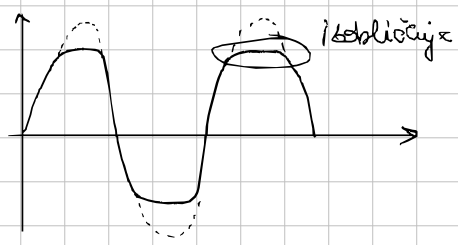

→ Želimo spriječiti da pojačalo „odluči" kad će doći do izobličenja

- želimo ulazeći na izlaz pojačanja A-glavne

Primjer: (slika gore)

$R = 10k\Omega$ $R_1 = 10k\Omega$ $R_2 = 10k\Omega$ $U_Z = 5V$ $U_\gamma = 0.7V$

a) C uz koji će frekv. oscilirana biti $f_0 = 1kHz$.

b) amplituda izlaznog napona

* poz pol → D_2 zaporno, D_1 propusno U_Z = zaporno
* neg pol → D_2 propusno, D_2 zaporno U_γ = propusno

$$\dashrightarrow f_0 = \frac{1}{2\pi \cdot RC} \dashrightarrow 10^3 = \frac{1}{2\pi \cdot 10^4 \cdot C} \Rightarrow \boxed{C = 16\,nF}$$

za pozitiv.

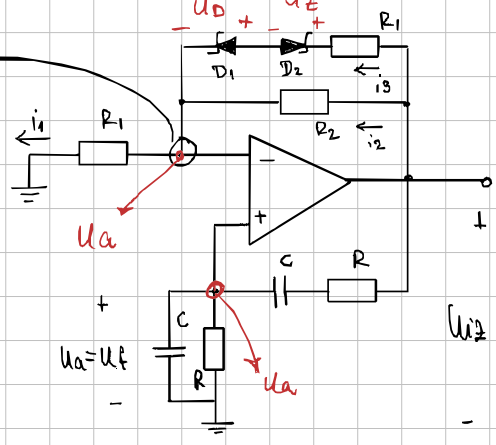

čvor: $J_{1m} = J_{2m} + J_{3m}$ (max)

jer je za idealno OP razlika napona nula!

↳ jer $A \to \infty$

$$\Rightarrow J_1 = \frac{U_a}{R_1}, \quad J_{2m} = \frac{U_{iz} - U_a}{R_2}$$

$$J_3 = \frac{U_{iz} - (U_Z + U_d) - U_{am}}{R_1}$$

$U_{izm} = ?$ $U_{am} = ?$

zbog oscilatora znamo:

$$U_{am} = \frac{U_{izm}}{3} \quad (2)$$

$$\frac{U_a}{R_1} = \frac{U_{iz} - U_a}{R_2} + \frac{U_{iz} - (U_Z + U_a) - U_{am}}{R_1} \quad (1)$$

$$U_Z + U_d = U_Z + U_\gamma \quad (2.1) \dashrightarrow \boxed{U_{iz} = \frac{3(U_Z + U_\gamma)}{1 + \frac{2R_1}{R_2}} = \dots \approx 9V}$$

Primjer 8.2.)

$R_G = 1M\Omega$

$R_D = 1k\Omega$

$R_S = 200\Omega$

$R = 1k\Omega \qquad C = 10nF$

$f_0 = ?$

$g_{m1} = g_{m2} = g_m = ?$

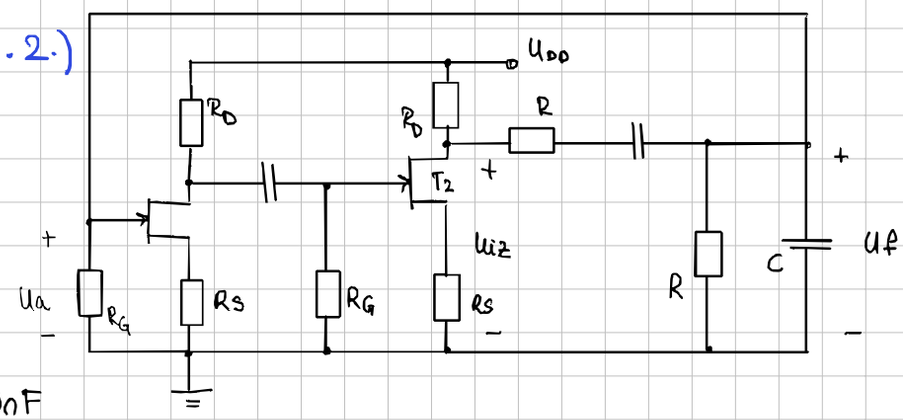

$C_0 \approx \emptyset$

A-grana

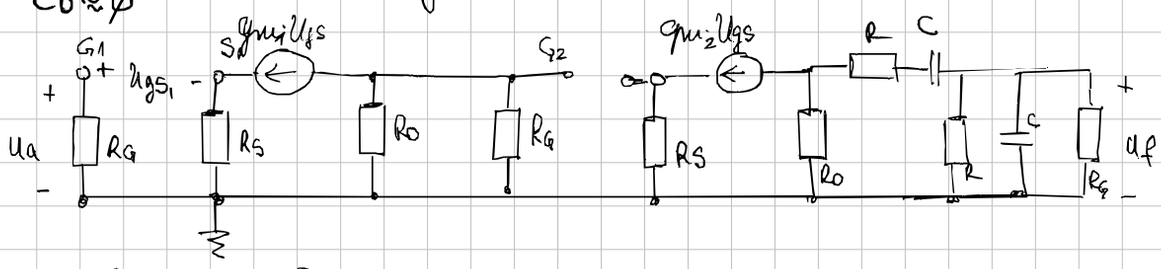

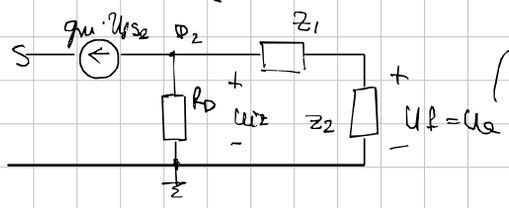

$$\beta A = \frac{U_f}{U_{iz}} \cdot \frac{U_{iz}}{U_a} = \underbrace{\frac{U_f}{U_{iz}}}_{\beta} \cdot \underbrace{\frac{U_{iz}}{U_{gs_2}} \cdot \frac{U_{gs_2}}{U_{gs_1}} \cdot \frac{U_{gs_1}}{U_a}}_{A}$$

$$\frac{U_f}{U_{gs_2}} = \frac{U_f}{U_{iz}} \cdot \frac{U_{iz}}{U_{gs_2}} = \frac{Z_2}{Z_1 + Z_2} \cdot (-g_m) \cdot (R_D \| (Z_1 + Z_2)) = -g_m \frac{Z_2}{\cancel{Z_1 + Z_2}} \frac{R_D \cancel{(Z_1 + Z_2)}}{R_D + Z_1 + Z_2}$$

$$= -g_m \cdot R_D \frac{Z_2}{Z_1 + Z_2 + R_D} = -g_m \cdot R_D \frac{\frac{R}{1 + j\omega RC}}{R_D + R + \frac{1}{j\omega C} + \frac{R}{1 + j\omega CR}} =$$

$$\frac{U_f}{U_{gs_2}} = \dots = \frac{-g_m R_D}{3 + \frac{R_D}{R} + j\left[\omega (R_D + R) C - \frac{1}{\omega RC}\right]}$$

$$U_{gs_2} = -g_m \cdot U_{gs_1} \cdot R_D - g_m \cdot U_{gs_2} \cdot R_S \longrightarrow \frac{U_{gs_2}}{U_{gs_1}} = \frac{-g_m \cdot R_D}{1 + g_m \cdot R_S}$$

$$U_{gs_1} = U_a - g_m \cdot U_{gs_1} \cdot R_S \longrightarrow \frac{U_{gs_1}}{U_a} = \frac{1}{1 + g_m \cdot R_S}$$

* na frekv. osc. ω_0 povratni napon iz grane P.V. mora biti jednak U_{ul}. $U_f = U_a$

→ pojačanje u petlji povratne veze mora biti jednako jedinici

$$\beta A_v = \frac{U_f}{U_{gs_2}} \cdot \frac{U_{gs_2}}{U_{gs_1}} \cdot \frac{U_{gs_1}}{U_a} = \frac{(g_m R_D)^2}{3 + \frac{R_D}{R} + j\left(\omega_0 (R_D + R) C - \frac{1}{\omega_0 RC}\right)} \cdot \frac{1}{(1 + g_m R_S)^2} = 1$$

→ A je jednako 1

imaginarni član $= \emptyset$

$$\omega_0 (R_D + R) C - \frac{1}{\omega RC} = 0 \dashrightarrow f_0 = \frac{\omega_0}{2\pi} = \dots \Rightarrow \boxed{f_0 = 11.3 kHz}$$

Na frekv. oscilacija f_0 amplituda u petlji P.V. $|\beta A_v| = 1$;

$$g_m R_D = (1 + g_m R_S) \sqrt{3 + \frac{R_D}{R}} = 2 (1 + g_m R_S)$$

$$g_m = \frac{2}{R_D - 2R_S} = \frac{2}{1 - 2 \cdot 0{,}2} = \boxed{3{,}33 mA/V}$$

minimalna strmina za ovu FET-a

Oscilator s faznim pomakom

A-grana → SZU

β-grana → trostruka CR mreža

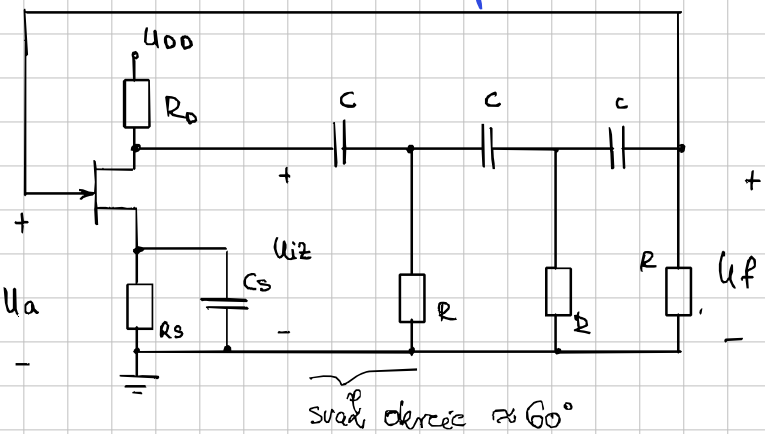

Oscilacije = na frekv. na kojoj CR-mreža unosi fazni pomak 180°

*90° se postiže samo za $\omega \to \infty$

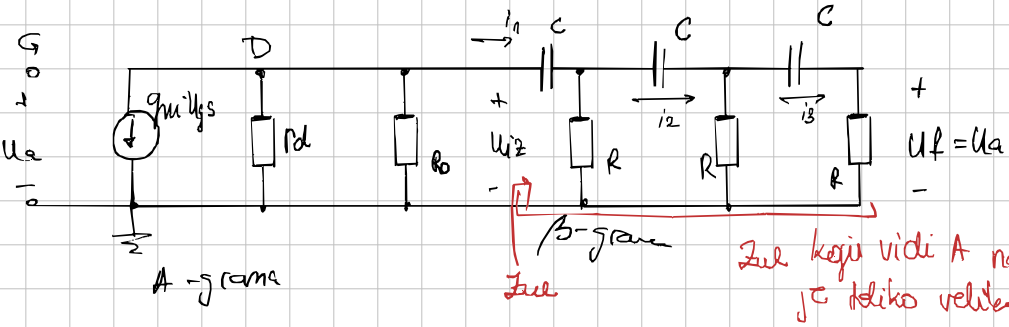

$$A_v = \frac{U_{iz}}{U_a} = -g_m \cdot (r_d \| R_D)$$

$$U_f = R I_3$$

$$U_{iz} = \left(R + \frac{1}{j\omega C}\right) I_1 - R I_2$$

$$\beta(j\omega) = \frac{U_f}{U_{iz}} = \frac{1}{1 - \frac{5}{(\omega RC)^2} - j\left[\frac{6}{\omega RC} - \frac{1}{(\omega RC)^3}\right]}$$

$$0 = -R I_1 + \left(2R + \frac{1}{j\omega C}\right) I_2 - R I_3$$

$$0 = -R I_2 + \left(2R + \frac{1}{j\omega C}\right) I_3$$

▸ Na frekv. oscilacija $\omega_0 \to \angle \beta(j\omega_0) = 180° \to \beta(j\omega_0)$ je neg. real. br.

→ Imaginarni dio $\beta(j\omega_0)$ jednak je 0

$$\frac{6}{\omega RC} - \frac{1}{(\omega RC)^3} = 0$$

$$\sqrt{6}\,\omega RC = 1 \to \omega_0 = \frac{1}{\sqrt{6}RC} \Rightarrow f_0 = \frac{\omega_0}{2\pi} = \frac{1}{2\pi\sqrt{6}\cdot RC}$$

$$\beta(j\omega_0) = \frac{1}{1 - \frac{5}{(\omega_0 RC)^2}} = \frac{-1}{29} \to \boxed{|A_v| \geq 29}$$

Oscilator s faznim pomakom s OP.

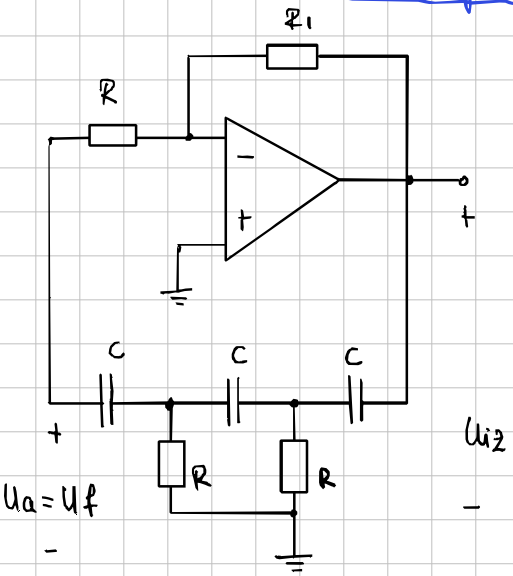

$$A_v = \frac{U_{iz}}{U_a} = \frac{-R_1}{R}$$

$$|A_v| \geq 29 \longrightarrow R_1 \geq 29R$$

→ + Stabilizacija amplitude

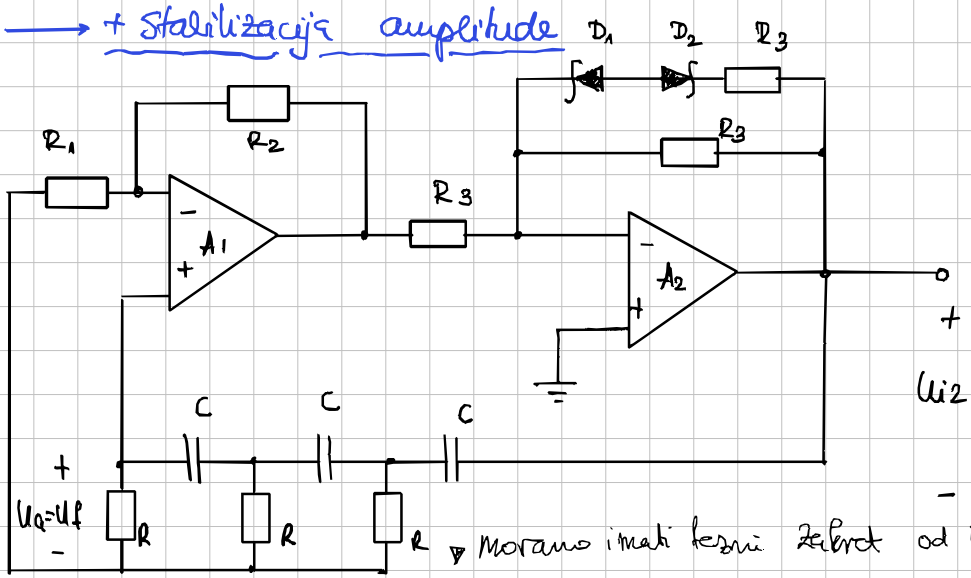

▼ moramo imati fazni zakret od 180° jer struj sam po sebi ostaju 180° (faza mora ostati ista)